MIAMI-DADE COUNTY
DEPARTMENT OF REGULATORY AND ECONOMIC RESOURCES (RER)
BOARD AND CODE ADMINISTRATION DIVISION

MIAMI–DADE COUNTY, FLORIDA
PRODUCT CONTROL SECTION
11805 SW 26 Street, Room 208
T (786) 315–2590 F (786) 315–2599
www.miamidade.gov/economy

NOTICE OF ACCEPTANCE (NOA)

PGT Industries, Inc.
1070 Technology Drive,
Nokomis, Fl. 34275

SCOPE:

This NOA is being issued under the applicable rules and regulations governing the use of construction materials. The documentation submitted has been reviewed and accepted by Miami–Dade County RER–Product Control Section to be used in Miami–Dade County and other areas where allowed by the Authority Having Jurisdiction (AHJ).

This NOA shall not be valid after the expiration date stated below. The Miami–Dade County Product Control Section (In Miami–Dade County) and/ or the AHJ (in areas other than Miami–Dade County) reserve the right to have this product or material tested for quality assurance purposes. If this product or material fails to perform in the accepted manner, the manufacturer will incur the expense of such testing and the AHJ may immediately revoke, modify, or suspend the use of such product or material within their jurisdiction. RER reserves the right to revoke this acceptance, if it is determined by Miami–Dade County Product Control Section that this product or material fails to meet the requirements of the applicable building code.

This product is approved as described herein, has been designed to comply with the Florida Building Code, including the High Velocity Hurricane Zone.

DESCRIPTION: Series "FD–750" Outswing Aluminum French Door w/ Sidelites – L.M.I.

APPROVAL DOCUMENT: Drawing No. **8000–11 Rev G**, titled "Alum. French Door & Side Lites, Impact", sheets 1 through 12 of 12, dated 12/23/04 and last revised on 11/22/2019, prepared by manufacturer, signed and sealed by Anthony Lynn Miller, P. E., bearing the Miami–Dade County Product Control Section Renewal stamp with the Notice of Acceptance number and Expiration date by the Miami–Dade County Product Control Section.

MISSILE IMPACT RATING: Large and Small Missile Impact Resistant

Limitations:

1. See sheet **3** for Design Pressures (DP) VS sizes and glass types for doors and sidelites and overhang /sill options in sheet **1**. When doors are assembled with sidelites, lower design pressures from door or sidelite shall control.
2. See glass options in sheet **1 & 2** and spacer options for insulated glass in sheet **9**.
3. See installation anchoring details in sheets **10, 11** and **12.**

LABELING: Each unit shall bear a permanent label with the manufacturer's name or logo, city, state, model/ series, and following statement: "Miami–Dade County Product Control Approved", unless otherwise noted herein.

RENEWAL of this NOA shall be considered after a renewal application has been filed and there has been no change in the applicable building code negatively affecting the performance of this product.

TERMINATION of this NOA will occur after the expiration date or if there has been a revision or change in the materials, use, and/ or manufacture of the product or process. Misuse of this NOA as an endorsement of any product, for sales, advertising or any other purposes shall automatically terminate this NOA. Failure to comply with any section of this NOA shall be cause for termination and removal of NOA.

ADVERTISEMENT: The NOA number preceded by the words Miami–Dade County, Florida, and followed by the expiration date may be displayed in advertising literature. If any portion of the NOA is displayed, then it shall be done in its entirety.

INSPECTION: A copy of this entire NOA shall be provided to the user by the manufacturer or its distributors and shall be available for inspection at the job site at the request of the Building Official.

This NOA **renews NOA No. 17-0504.04** and consists of this page 1 and evidence pages E–1, E–2, E-3 and E–4, as well as approval document mentioned above.

The submitted documentation was reviewed by **Ishaq I. Chanda, P. E.**

MIAMI-DADE COUNTY APPROVED

12/16/19

NOTICE OF ACCEPTANCE: EVIDENCE SUBMITTED

1. Evidence submitted under previous approvals

A. DRAWINGS

1. Manufacturer's die drawings and sections.
2. Drawing No. **8000–11**, titled "Alum. French Door & Side Lites, Impact", sheets 1 through 12 of 12, dated 12/23/04, with revision **"E"** dated 10/12/11, prepared by manufacturer, signed and sealed by Anthony Lynn Miller, P. E.

B. TESTS

1. Test reports on: 1) Air Infiltration Test, per FBC, TAS 202–94
   2) Uniform Static Air Pressure Test, Loading per FBC, TAS 202–94
   3) Water Resistance Test, per FBC, TAS 202–94
   4) Forced Entry Test, per FBC 2411.3.2.1, and TAS 202–94

   along with marked–up drawings and installation diagram of an aluminum sliding glass door using a low sill threshold, glazed with 7/16" laminated glass, prepared by Fenestration Testing Laboratory, Inc., Test Report No. **FTL–5941**, dated 05/20/09, signed and sealed by Julio E. Gonzalez, P. E. ***(Submitted under previous NOA No. 09–1028.10)***

   along with marked–up drawings and installation diagram of an aluminum doors of OXXO configuration, prepared by Fenestration Testing Laboratory, Inc., Test Report No. **FTL–4921,** dated 07/17/06, signed and sealed by Edmundo J. Largaespada, P. E.
   (Submitted under previous NOA No. 05–0419.03)
2. Test reports on: 1) Air Infiltration Test, per FBC, TAS 202–94
   2) Uniform Static Air Pressure Test, Loading per FBC, TAS 202–94
   3) Water Resistance Test, per FBC, TAS 202–94
   4) Forced Entry Test, per FBC 2411.3.2.1, and TAS 202–94

   along with marked–up drawings and installation diagram of an aluminum doors of OXXO configuration, prepared by Fenestration Testing Laboratory, Inc., Test Reports No.'s **FTL–4528,** dated 02/14/05, **FTL–4315,** dated 09/13/04, both signed and sealed by Edmundo J. Largaespada, P. E. ***(Submitted under previous NOA No. 05–0419.03)***
3. Test reports on: 1) Large Missile Impact Test per FBC, TAS 201–94
   2) Cyclic Wind Pressure Loading per FBC, TAS 203–94

   along with marked–up drawings and installation diagram of an aluminum doors of XXXO configuration, prepared by Fenestration Testing Laboratory, Inc., Test Reports No.'s **FTL–4529,** dated 02/14/05, **FTL–4530,** dated 02/14/05, **FTL–4311,** dated 09/01/04, all signed and sealed by Edmundo J. Largaespada, P. E.***(Submitted under previous NOA No. 05–0419.03)***
4. Test reports on: 1) Uniform Static Air Pressure Test, Loading per FBC, TAS 202–94
   2) Large Missile Impact Test per FBC, TAS 201–94
   3) Cyclic Wind Pressure Loading per FBC, TAS 203–94

   along with marked–up drawings and installation diagram of an aluminum outswing French door, prepared by Fenestration Testing Laboratory, Inc., Test Report No. **FTL–4312,** dated 09/13/04, signed and sealed by Edmundo J. Largaespada, P. E.***(Submitted under previous NOA No. 05–0419.03)***

C. CALCULATIONS

1. Anchor verification calculations and structural analysis, complying with **FBC 2010 and FBC 2014, 5th Edition**, prepared by manufacturer, dated 10/11/11, signed and sealed by A. Lynn Miller, P. E.
2. Glazing complies with ASTM E1300–04/ 09

Ishaq I. Chanda

Ishaq I. Chanda, P. E.
Product Control Unit Supervisor
NOA No. 19-1126.08
Expiration Date: February 24, 2025
Approval Date: January 09, 2020

NOTICE OF ACCEPTANCE: EVIDENCE SUBMITTED

D. QUALITY ASSURANCE

1. Miami–Dade Department of Regulatory and Economic Resources (RER).

E. MATERIAL CERTIFICATIONS

1. Notice of Acceptance No. **14–0916.10** issued to **Kuraray America, Inc.** for their **"Kuraray PVB Glass Interlayer"** dated 02/19/15, expiring on 12/11/16.
2. Notice of Acceptance No. **14–0423.15** issued to **Eastman Chemical Company (MA)** for their **"Saflex CP – Saflex and Saflex HP Composite Glass Interlayers with PET Core"** dated 06/19/14, expiring on 12/11/18.
3. Notice of Acceptance No. **14–0423.16** issued to **Eastman Chemical Company (MA)** for their **"Saflex HP Clear or Color Glass Interlayers"** dated 06/19/14, expiring on 04/14/18.

F. STATEMENTS

1. Statement letter of conformance to **FBC–2010** and complying with **FBC 5th Edition (2014)**, issued by manufacturer, dated 11/06/14, signed and sealed by A. Lynn Miller, P. E.
2. Statement letter of no financial interest, issued by manufacturer, dated 11/06/14, signed and sealed by A. Lynn Miller, P. E.
3. Department of State Certification of **PGT INDUSTRIES, INC.** as a for profit corporation, active and organized under the laws of the State of Florida, dated 01/27/15 and filed by Ken Detzner, Secretary of State.
4. Notification of Successor Engineer for manufacturer's NOA document per **Section 61G15–27.001** of the **Florida Administrative Code**, notifying original engineer that the successor engineer is assuming full professional and legal responsibility for all engineering documents pertaining to this NOA, dated 10/07/11, signed and sealed by A. Lynn Miller, P. E.
5. Proposal No. **08–1891** issued by Product Control, dtd 01/26/09, signed by Ishaq Chanda, P. E.

G. OTHERS

1. Notice of Acceptance No. **11–1013.24**, issued to PGT Industries for their Series "FD–750" Outswing Aluminum French Door w/Sidelites – L.M.I., expiring on 02/24/15.

2. Evidence submitted under previous approvals

A. DRAWINGS

1. Drawing No. **8000–11**, titled "Alum. French Door & Side Lites, Impact", sheets 1 through 12 of 12, dated 12/23/04, with revision "G" dated 04/10/17, prepared by manufacturer, signed and sealed by Anthony Lynn Miller, P. E.

B. TESTS

1. Reference Test report on 1) Uniform Static Air Pressure Test, per FBC, TAS 202-94
   2) Large Missile Impact Test per FBC, TAS 201-94
   3) Cyclic Wind Pressure Loading per FBC, TAS 203-94

Along with marked-up drawings and installation diagram of Aluminum Sliding Glass Doors (w/ PS, Super, Cardinal & Duraseal Spacers), prepared by Fenestration Testing Laboratory, Inc., Test Reports No(s) **FTL-8717, FTL-8970** and **FTL-8968**, dated 02/15/16, 06/07/16 and 06/20/16, all signed & sealed by Idalmis Ortega, P.E.***(Submitted under previous NOA No. 16-0629.16)***

Ishaq I. Chanda

Ishaq I. Chanda, P. E.
Product Control Unit Supervisor
NOA No. 19-1126.08
Expiration Date: February 24, 2025
Approval Date: January 09, 2020

NOTICE OF ACCEPTANCE: EVIDENCE SUBMITTED

C. CALCULATIONS

1. Anchor verification calculations and structural analysis, complying with **FBC 5th Edition (2014)** and **FBC 6th Edition (2017)**, prepared by manufacturer, dated 11/22/17, signed and sealed by A. Lynn Miller, P. E.

D. QUALITY ASSURANCE

1. Miami–Dade Department of Regulatory and Economic Resources (RER).

E. MATERIAL CERTIFICATIONS

1. Notice of Acceptance No. **16-1117.01** issued to **Kuraray America, Inc.** for their **"Trosifol® Ultraclear, Clear, and Color PVB Glass Interlayers"** dated 01/19/17, expiring on 07/08/19.
2. Notice of Acceptance No. **17-0712.03** issued to **Eastman Chemical Company (MA)** for their **"Saflex CP – Saflex and Saflex HP Composite Glass Interlayers with PET Core"** dated 09/07/17, expiring on 12/11/18.
3. Notice of Acceptance No. **17-0712.04** issued to **Eastman Chemical Company (MA)** for their **"Saflex HP Clear or Color Glass Interlayers"** dated 09/07/17, expiring on 04/14/18.

F. STATEMENTS

1. Statement letter of conformance with **FBC 5th Edition (2014)** and **FBC 6th Edition (2017),** issued by manufacturer, dated 08/16/17, signed and sealed by A. Lynn Miller, P. E.
2. Test proposal No. **16-0152** dated 03/09/16 approved by RER.

G. OTHERS

1. Notice of Acceptance No. **16-0629.16**, issued to PGT Industries for their Series "FD–750" Outswing Aluminum French Door w/Sidelites – L.M.I., expiring on 02/24/20.

3. Evidence submitted under previous approvals

A. DRAWINGS

1. Drawing No. **8000–11**, titled "Alum. French Door & Side Lites, Impact", sheets 1 through 12 of 12, dated 12/23/04, with revision "F" dated 05/05/16, prepared by manufacturer, signed and sealed by Anthony Lynn Miller, P. E.

B. TESTS (*Submitted under previous* approvals)

1. None

C. CALCULATIONS (*Submitted under previous NOA No. 14-1117.05)*

1. None.

D. QUALITY ASSURANCE

1. Miami–Dade Department of Regulatory and Economic Resources (RER).

E. MATERIAL CERTIFICATIONS

1. None.

F. STATEMENTS

1. None.

Ishaq I. Chanda

Ishaq I. Chanda, P. E.
Product Control Unit Supervisor
NOA No. 19-1126.08
Expiration Date: February 24, 2025
Approval Date: January 09, 2020

NOTICE OF ACCEPTANCE: EVIDENCE SUBMITTED

G. OTHERS

1. Notice of Acceptance No. **14-1117.05**, issued to PGT Industries for their Series "FD–750" Outswing Aluminum French Door w/Sidelites – L.M.I., expiring on 02/24/20.

4. New Evidence submitted

A. DRAWINGS

1. Drawing No. **8000–11 Rev G**, titled "Alum. French Door & Side Lites, Impact", sheets 1 through 12 of 12, dated 12/23/04 and last revised on 11/22/2019, prepared by manufacturer, signed and sealed by Anthony Lynn Miller, P. E.

B. TESTS

1. None.

C. CALCULATIONS (submitted under file **#17-0504.04)**

1. None.
2. Glazing complies with ASTME-1300-02, -04 & -09.

D. QUALITY ASSURANCE

1. Miami Dade Department of Regulatory and Economic Resources (RER).

E. MATERIAL CERTIFICATIONS

1. Notice of Acceptance No. **19-0305.02** issued to **Kuraray America, Inc.** for their **"Trosifol® Ultraclear, Clear, and Color PVB Glass Interlayers**", expiring on 07/08/24.
2. Notice of Acceptance No. **18-0301.06** issued to **Eastman Chemical Company (MA)** for their "**Saflex CP – Saflex and Saflex HP Composite Glass Interlayers with PET Core"** expiring on 12/11/23.
3. Notice of Acceptance No. **17-0712.05** issued to **Eastman Chemical Company (MA)** for their "**Saflex HP Clear or Color Glass Interlayers**", expiring on 05/21/21.

F. STATEMENTS

1. Statement letter of conformance to FBC 2017 (**6th** Edition), issued by manufacturer, dated 11/22/19, signed and sealed by Lynn Miller, P. E.

G. OTHER

1. This NOA **renews # 17-0504.04.**

Ishaq I. Chanda

Ishaq I. Chanda, P. E.
Product Control Unit Supervisor
NOA No. 19-1126.08
Expiration Date: February 24, 2025
Approval Date: January 09, 2020

SERIES 750 OUTSWING, IMPACT RESISTANT FRENCH DOOR AND SIDE LITE

DESIGN PRESSURE RATING	IMPACT RATING
SEE TABLE 1 ON SHEET 3	RATED FOR LARGE & SMALL MISSILE IMPACT RESISTANCE

1. GLAZING OPTIONS:
   - A. 7/16" LAMI CONSISTING OF (1) LITE OF 3/16" ANNEALED GLASS AND (1) LITE OF 3/16" HEAT STRENGTHENED GLASS WITH AN .090" PVB INTERLAYER
   - B. 7/16" LAMI CONSISTING OF (2) LITES OF 3/16" HEAT STRENGTHENED GLASS WITH AN .090" PVB INTERLAYER
   - C. 7/16" LAMI CONSISTING OF (1) LITE OF 3/16" ANNEALED GLASS AND (1) LITE OF 3/16" HEAT STRENGTHENED GLASS WITH AN .075" INTERLAYER.
   - D. 7/16" LAMI CONSISTING OF (2) LITES OF 3/16" HEAT STRENGTHENED GLASS WITH AN .075" INTERLAYER.
   - E. 7/8" LAMI I.G. CONSISTING OF (1) LITE OF 3/16" TEMPERED GLASS OUTSIDE, 1/4" AIR SPACE AND (1) 7/16" LAMI GLASS ASSEMBLY INSIDE (3/16" A,.090" PVB, 3/16" HS).
   - F. 7/8" LAMI I.G. CONSISTING OF (1) LITE OF 3/16" TEMPERED GLASS OUTSIDE, 1/4" AIR SPACE AND (1) 7/16" LAMI GLASS ASSEMBLY INSIDE (3/16" HS,.090" PVB, 3/16" HS).
   - G. 7/8" LAMI I.G. CONSISTING OF (1) LITE OF 3/16" TEMPERED GLASS OUTSIDE, 1/4" AIR SPACE AND (1) 7/16" LAMI GLASS ASSEMBLY INSIDE (3/16" A,.075" INTERLAYER, 3/16" HS).
   - H. 7/8" LAMI I.G. CONSISTING OF (1) LITE OF 3/16" TEMPERED GLASS OUTSIDE, 1/4" AIR SPACE AND (1) 7/16" LAMI GLASS ASSEMBLY INSIDE (3/16" HS,.075" INTERLAYER, 3/16" HS).

2. DESIGN PRESSURES: TABLE 1, SHEET 3.
   - A. NEGATIVE DESIGN LOADS BASED ON TESTED PRESSURE AND GLASS TABLES ASTM E1300.
   - B. POSITIVE DESIGN LOADS BASED ON WATER TEST PRESSURE AND GLASS TABLES ASTM E1300.
   - C. DESIGN LOADS ARE BASED ON ALLOWABLE STRESS DESIGN, ASD.

TABLE A:

Anchor Group	Anchor Type	Frame Member	Substrate	Min. Edge Distance	Min. Embedment or Metal Thickness
A	#12 Steel SMS (Gr. 5)	All	Southern Pine (SG = 0.55)	9/16"	1-3/8"
		All	6063-T5 Aluminum	3/8"	1/8"
B	1/4" Elco UltraCon®	All	Concrete (min. 2.85 ksi)	2"	1-3/4"
		Jamb	Hollow Block (ASTM C90)	2"	1-1/4"
C	1/4" 410 SS Elco CreteFlex®	All	Concrete (min. 3.35 ksi)	1-3/4"	1-3/4"
		Jamb	Hollow Block (ASTM C90)	1-3/4"	1-1/4"
		All	Southern Pine (SG = 0.55)	1"	1-3/8"

1) WHERE SUBSTRATE CONDITIONS REQUIRE ANCHORAGE FROM MORE THAN ONE OF THE ANCHOR GROUPS ABOVE, CHOOSE THE ANCHOR GROUP OF THE LOWEST LETTER FOR ALL TABLES IN THIS APPROVAL.
2) ALL ANCHOR HEAD TYPES ARE APPLICABLE.
3) MIN. OF 3 THREADS BEYOND METAL SUBSTRATE.

CODES / STANDARDS USED:
- 2017 FLORIDA BUILDING CODE (FBC), 6TH EDITION
- 2014 FLORIDA BUILDING CODE (FBC), 5TH EDITION
- ASTM E1300-09
- ANSI/AF&PA NDS-2015 FOR WOOD CONSTRUCTION
- ALUMINUM DESIGN MANUAL, ADM-2015
- AISI S100-12
- AISC 360-10

3. CONFIGURATIONS: X, O, XX, XO, OX, XXX, XXO, OXX, OXO, XXXX, XXXO, OXXX, OR OXXO WHERE O REPRESENTS EITHER THE NARROW JAMB OR FULL JAMB SIDE LITE. ANY TWO ADJACENT X UNITS CAN BE EITHER TWO SINGLE, X DOORS OR A DOUBLE, XX DOOR' BOTH USING EITHER THE STANDARD OR THE LOW-RISE SILL. THE FRENCH DOOR ASSEMBLY BEAM IS USED TO ASSEMBLE X, XX, AND O UNITS TO MAKE THE ABOVE CONFIGURATIONS.

4. ANCHORAGE: THE 33 1/3% STRESS INCREASE HAS NOT BEEN USED IN THE DESIGN OF THIS PRODUCT. FOR ANCHORAGE REQUIREMENTS SEE SHEETS 10 THRU 12.

5. SHUTTERS ARE NOT REQUIRED.

6. SEALANT: INSTALLATION SCREWS, FRAME AND PANEL CORNERS SEALED WITH CLEAR COLORED SEALANT. VERTICAL ASSEMBLY BEAM SEAM-SEALED ON THE INTERIOR AND EXTERIOR WITH CONTRACTOR'S SEALANT.

7. REFERENCES: TEST REPORTS: FTL-4311, FTL-4312, FTL-4315, FTL-4527, FTL-4528, FTL-4529, FTL-4530, FTL-4921 AND FTL-5941.
   ANSI/AF&PA NDS FOR WOOD CONSTRUCTION
   ADM ALUMINUM DESIGN MANUAL

8. THIS PRODUCT HAS BEEN DESIGNED & TESTED TO COMPLY WITH THE REQUIREMENTS OF THE FLORIDA BUILDING CODE, INCLUDING THE HIGH VELOCITY HURRICANE ZONE (HVHZ).

PRODUCT RENEWED as complying with the Florida Building Code
Acceptance No. 19-1126.08
Expiration Date FEB 24, 2025
By Miami Dade Product Control

GENERAL NOTES..... 1
CONFIGURATIONS..... 1
GLAZING DETAILS..... 2
DESIGN PRESSURES..... 3
ELEVATIONS..... 4
VERT. SECTIONS..... 5
HORIZ. SECTIONS..... 6
PARTS LIST..... 7
EXTRUSIONS..... 8-9
ANCHORAGE..... 10-12

Material	Min. F_y	Min. F_u
Steel Screw	92 ksi	120 ksi
Elco UltraCon®	155 ksi	177 ksi
410 SS Elco CreteFlex®	127.4 ksi	189.7 ksi
6063-T5 Aluminum	16 ksi	22 ksi

"PVB" = .090" TROSIFOL® PVB BY KURARAY AMERICA, INC. OR SAFLEX/KEEPSAFE MAXIMUM PVB BY EASTMAN CHEMICAL CO.; VANCEVA BY EASTMAN CHEMICAL CO.

ANTHONY LYNN MILLER LICENSE No. 58705 STATE OF FLORIDA PROFESSIONAL ENGINEER
1/22/19

A. LYNN MILLER, P.E.
FL P.E.# 58705

Revsd By:	Date:	Revisions:	
JR	04/10/17	G	UPDATED TO FBC 2017, ADDED TBL A, REV'D DOOR SILL.
Drawn By: F.K.	Date: 12/23/04	Checked By: L.T.	Date: 4/8/05

1070 TECHNOLOGY DRIVE
N. VENICE, FL 34275
(941) 480-1600
CERT. OF AUTH. #29296

PGT®

Description: GENERAL NOTES AND DRAWING MAP
Title: ALUM. FRENCH DOOR & SIDE LITES, IMPACT

Series/Model:	Scale:	Sheet:	Drawing No.	Rev:
FD750	FULL	1 of 12	8000-11	G

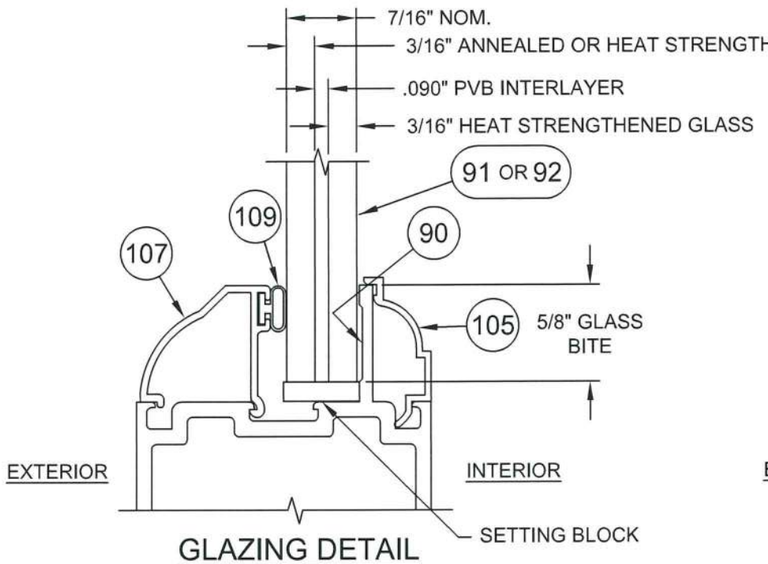

GLAZING DETAIL
7/16" LAMI GLASS W/ PVB INTERLAYER

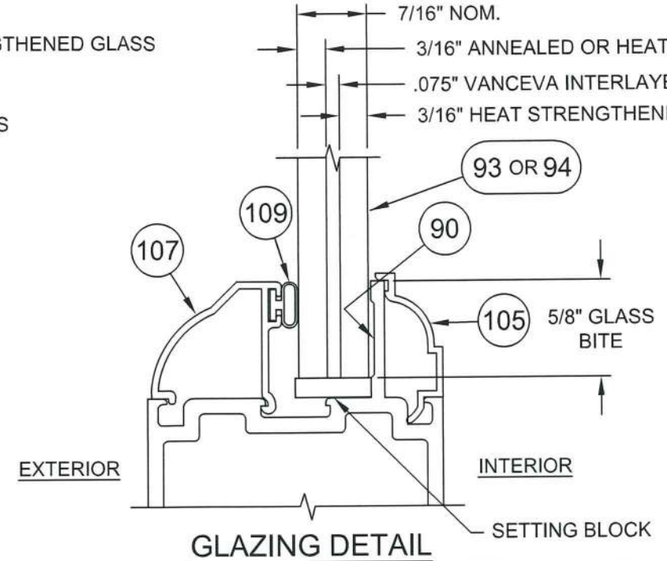

GLAZING DETAIL
7/16" LAMI GLASS W/ VANCEVA INTERLAYER

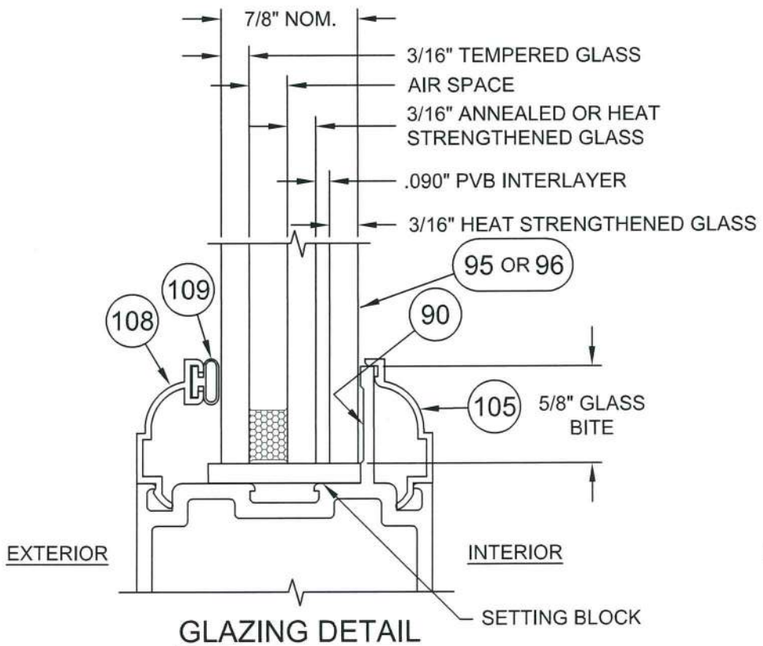

GLAZING DETAIL
7/8" LAMI I.G. GLASS W/ PVB INTERLAYER

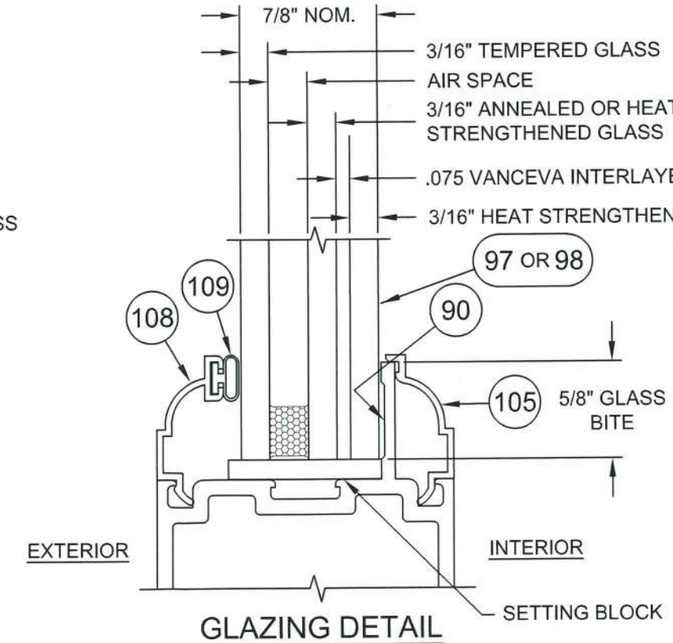

GLAZING DETAIL
7/8" LAMI I.G. GLASS W/ VANCEVA INTERLAYER

"PVB" = .090" TROSIFOL® PVB BY KURARAY AMERICA, INC. OR .090" SAFLEX/KEEPSAFE MAXIMUM PVB BY EASTMAN CHEMICAL CO.; VANCEVA BY EASTMAN CHEMICAL CO.

Revsd By:	Date:	Revisions:	
JR	04/10/17	G	NEW PVB MANUFACTURER.
Drawn By:	Date:	Checked By:	Date:
F.K.	12/23/04	L.T.	4/8/05

1070 TECHNOLOGY DRIVE
N. VENICE, FL 34275
(941) 480-1600
CERT. OF AUTH. #29296

PGT®

Description: GLAZING DETAILS
Title: ALUM. FRENCH DOOR & SIDE LITES, IMPACT

Series/Model:	Scale:	Sheet:	Drawing No.	Rev:
FD750	FULL	2 of 12	8000-11	G

PRODUCT RENEWED
as complying with the Florida
Building Code 19-1126.08
Acceptance No.
Expiration Date 2/24/2025
By
Miami Dade Product Control

ANTHONY LYNN MILLER
LICENSE
No. 58705
STATE OF FLORIDA
PROFESSIONAL ENGINEER
11/22/19

A. LYNN MILLER, P.E.
FL P.E.# 58705

Table 1. Maximum Design Pressures (psf)

Configuration		Width (in)	Allowed Glass Types	Height (in)									
				79 3/4" (6^8)		83 3/4" (7^0)		87 3/4"		91 3/4"		95 3/4" (8^0)	
French Door	X	37" (3^0)	A,E	+70.0	-80.0	+70.0	-80.0	+70.0	-80.0	+70.0	-80.0	+70.0	-80.0
			C,G	+100.0	-100.0	+100.0	-100.0	+100.0	-100.0	+100.0	-100.0	+100.0	-100.0
	XX	71 3/4" (6^0)	A,E	+70.0	-80.0	+70.0	-80.0	+70.0	-80.0	+70.0	-80.0	+70.0	-80.0
			C,G	+100.0	-100.0	+100.0	-100.0	+100.0	-100.0	+100.0	-100.0	+100.0	-100.0
Sidelite	Full Jamb	36 11/16"	A,E	+70.0	-80.0	+70.0	-80.0	+70.0	-80.0	+70.0	-80.0	+70.0	-80.0
			C,G	+100.0	-100.0	+100.0	-100.0	+100.0	-100.0	+100.0	-100.0	+100.0	-100.0
	Narrow Jamb	30 11/16"	C,G	+100.0	-100.0	+100.0	-100.0	+100.0	-100.0	+100.0	-100.0	+100.0	-100.0
		33 11/16"	C,G	+100.0	-100.0	+100.0	-100.0	+100.0	-100.0	+100.0	-100.0	+97.4	-97.4
		36 11/16"	A, B, E, F	+70.0	-80.0	+70.0	-80.0	+70.0	-80.0	+70.0	-80.0	+70.0	-80.0
			C,G	+100.0	-100.0	+99.9	-99.9	+95.3	-95.3	+91.4	-91.4	+87.9	-87.9
			D,H	+100.0	-100.0	+100.0	-100.0	+100.0	-100.0	+100.0	-100.0	+100.0	-100.0

Table 1a. Glass Type and Test Report Number

A - 7/16" LAMI (3/16"A,.090 PVB, 3/16"HS)	FTL-4311, 4312, 4315
B - 7/16" LAMI (3/16"HS,.090 PVB, 3/16"HS)	UPGRADE FTL-4311, 4312, 4315
C - 7/16" LAMI (3/16"A,.075 VANCEVA, 3/16"HS)	FTL-4527, 4528, 4529, 4530
D - 7/16" LAMI (3/16"HS,.075 VANCEVA, 3/16"HS)	UPGRADE FTL-4527, 4528, 4529, 4530
E - 7/8" LAMI I.G. (3/16"T, 1/4" AIR SPACE, 3/16"A,.090 PVB, 3/16"HS)	FTL-4311, 4312, 4315
F - 7/8" LAMI I.G. (3/16"T, 1/4" AIR SPACE, 3/16"HS,.090 PVB, 3/16"HS)	UPGRADE FTL-4311, 4312, 4315
G - 7/8" LAMI I.G. (3/16"T, 1/4" AIR SPACE, 3/16"A,.075 VANCEVA, 3/16"HS)	FTL-4527, 4528, 4529, 4530
H - 7/8" LAMI I.G. (3/16"T, 1/4" AIR SPACE, 3/16"HS,.075 VANCEVA, 3/16"HS)	UPGRADE FTL-4527, 4528, 4529, 4530

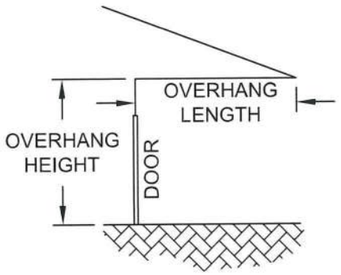

NOTES:
1. IF USING THE OPTIONAL LOW-RISE SILL (PART 10, SHEET 8 OF 12), THE OVERHANG LENGTH MUST BE GREATER THAN OR EQUAL TO THE OVERHANG HEIGHT (SEE DIAGRAM). IF NOT, THE MAXIMUM POSITIVE (+) DESIGN PRESSURE IS LIMITED TO +50.0 PSF FOR ALL STYLES AND SIZES OF THE DOOR AND ANY ADJOINING SIDELITES. (REF. FTL-5941)
2. FOR COMBINED UNITS, THE LOWEST DESIGN PRESSURE OF THE SIDELITE AND THE DOOR GOVERNS THE OVERALL ASSEMBLY DESIGN PRESSURE.

PRODUCT RENEWED
as complying with the Florida
Building Code
Acceptance No 19-1126.08
Expiration Date 2/24/2025
By [signature]
Miami Dade Product Control

ANTHONY LYNN MILLER
LICENSE
No. 58705
STATE OF FLORIDA
PROFESSIONAL ENGINEER
11/22/19

A. LYNN MILLER, P.E.
FL P.E.# 58705

Revsd By:	Date:	Revisions:	
JR	04/10/17	G	ADDED NOTE 2.
Drawn By: F.K.	Date: 12/23/04	Checked By: L.T.	Date: 4/8/05

1070 TECHNOLOGY DRIVE
N. VENICE, FL 34275
(941) 480-1600
CERT. OF AUTH. #29296

PGT®

Description: DESIGN PRESSURES
Title: ALUM. FRENCH DOOR & SIDE LITES, IMPACT

Series/Model:	Scale:	Sheet:	Drawing No.	Rev:
FD750	NTS	3 of 12	8000-11	G

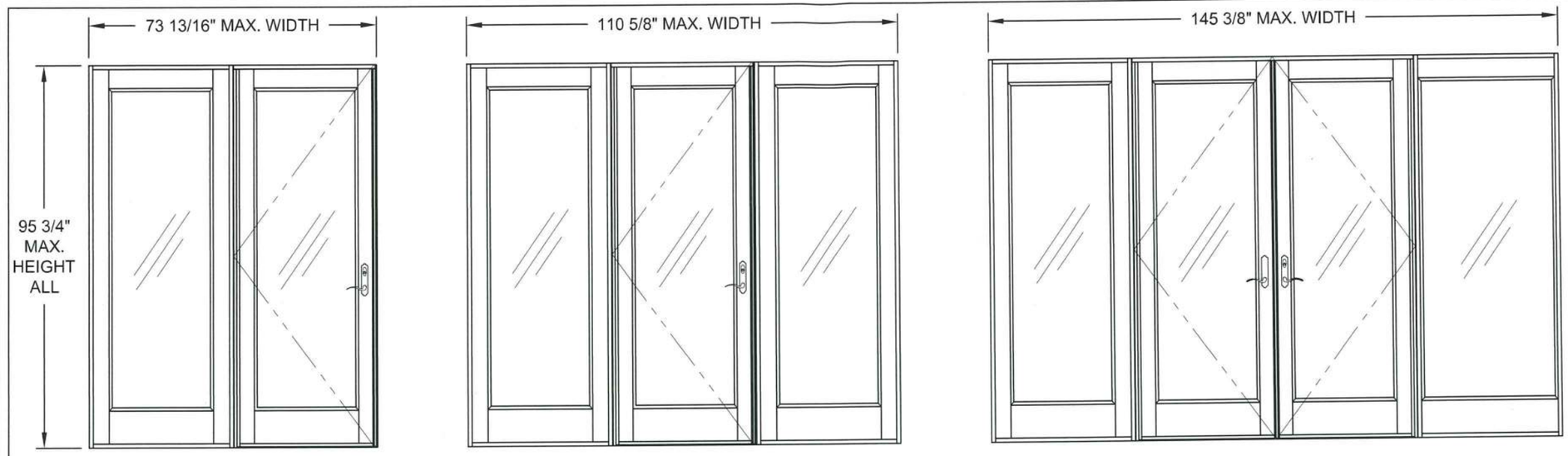

OX OR XO

OXO

OXXO (SHOWING EACH VERSION SIDELITE)

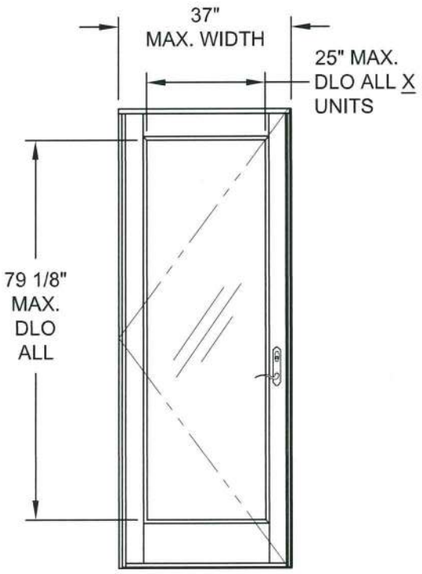

X

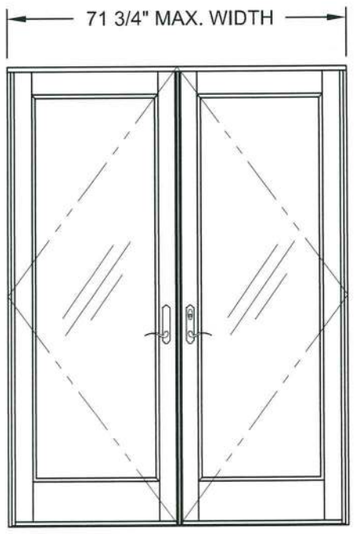

XX

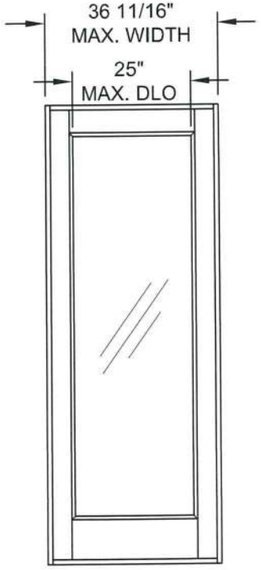

O (FULL JAMB)

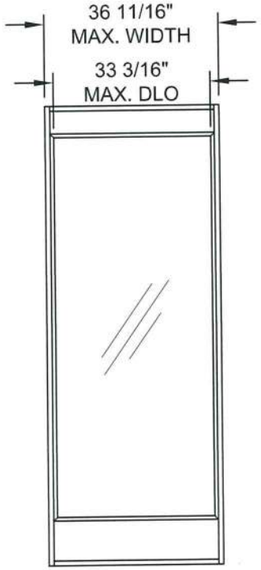

O (NARROW JAMB)

PRODUCT RENEWED
as complying with the Florida
Buiding Code
Acceptance No 19-1126.08
Expiration Date 2/24/2025
By [signature]
Miami Dade Product Control

NOTES:
1. CONFIGURATIONS WITH SIDE LITES CAN BE EITHER NARROW JAMB OR FULL JAMB VERSION.
2. FOR ANCHOR SPACING AND DETAILS SEE SHEETS 10 THROUGH 12.
3. FOR VERTICAL SECTIONS SEE SHEET 5 AND FOR HORIZONTAL SECTIONS SEE SHEET 6.

ANTHONY LYNN MILLER
LICENSE
No. 58705
STATE OF FLORIDA
PROFESSIONAL ENGINEER
11/22/19

A. LYNN MILLER, P.E.
FL P.E.# 58705

Revsd By:	Date:	Revisions:	
JR	04/10/17	G	NO CHANGES THIS SHEET.
Drawn By: F.K.	Date: 12/23/04	Checked By: L.T.	Date: 4/8/05

1070 TECHNOLOGY DRIVE
N. VENICE, FL 34275
(941) 480-1600
CERT. OF AUTH. #29296

PGT®

Description: EXAMPLE ELEVATIONS

Title: ALUM. FRENCH DOOR & SIDE LITES, IMPACT

Series/Model:	Scale:	Sheet:	Drawing No.	Rev:
FD750	NTS	4 of 12	8000-11	G

VERTICAL SECTION A
NARROW AND FULL JAMB SIDE LITE HEAD

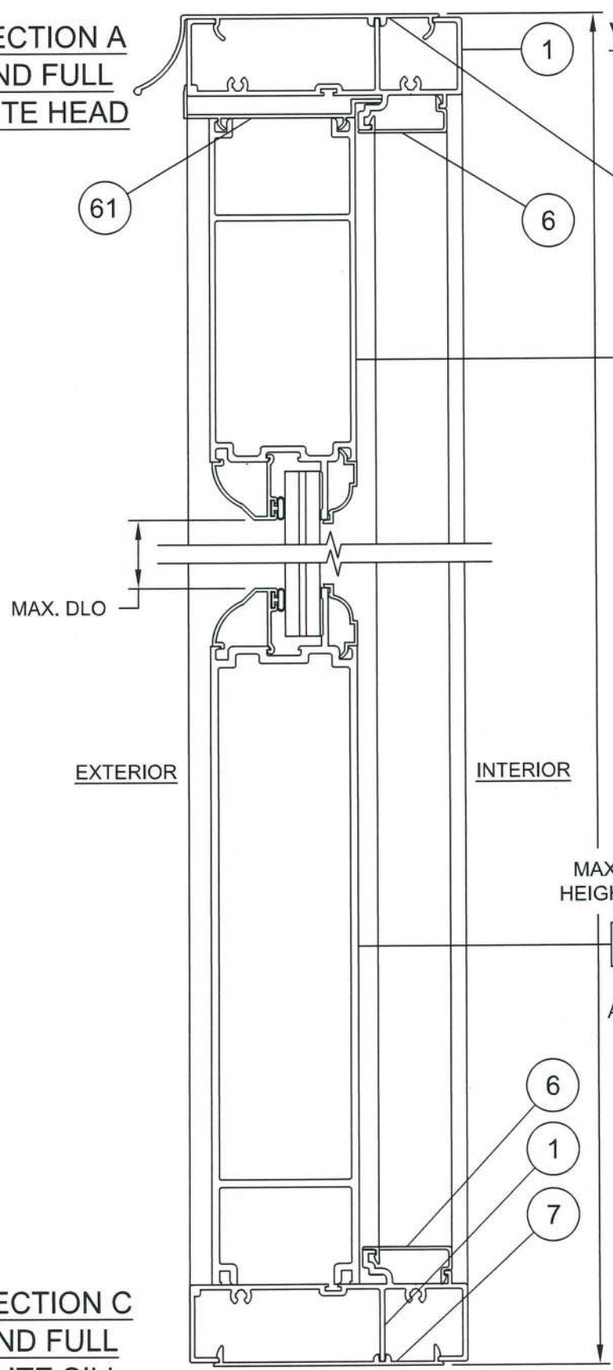

VERTICAL SECTION B
OUTSWING HEAD

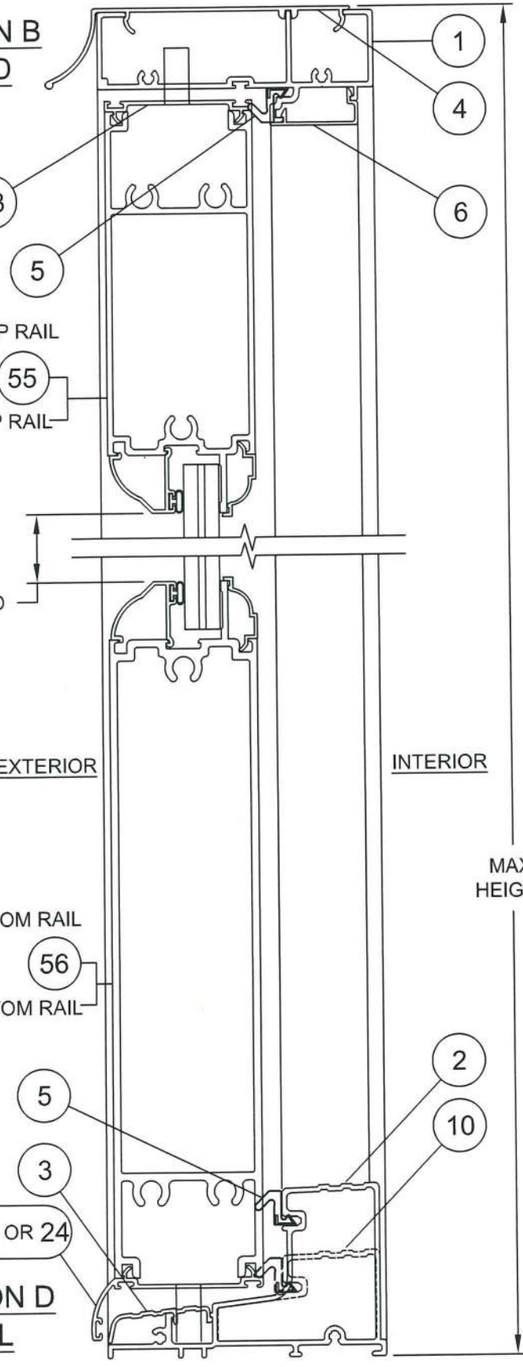

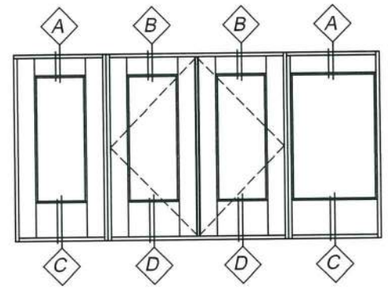

VERTICAL SECTION C
NARROW AND FULL JAMB SIDE LITE SILL

VERTICAL SECTION D
OUTSWING SILL

PRODUCT RENEWED
as complying with the Florida
Buiding Code
Acceptance No 19-1126.08
Expiration Date FEB 24, 2025
By Ishaq I. Chanda
Miami Dade Product Control

ANTHONY LYNN MILLER
LICENSE
No. 58705
11/22/19
STATE OF FLORIDA
PROFESSIONAL ENGINEER

A. LYNN MILLER, P.E.
FL P.E.# 58705

Revsd By:	Date:	Revisions:	
JR	04/10/17	G	REVISED SILL EXTRUSION
Drawn By: F.K.	Date: 12/23/04	Checked By: L.T.	Date: 4/8/05

1070 TECHNOLOGY DRIVE
N. VENICE, FL 34275
(941) 480-1600

CERT. OF AUTH. #29296

PGT®

Description: VERTICAL SECTIONS

Title: ALUM. FRENCH DOOR & SIDE LITES, IMPACT

Series/Model:	Scale:	Sheet:	Drawing No.	Rev:
FD750	1/2	5 of 12	8000-11	G

OXXO HORIZONTAL SECTION SHOWING (1) OF EACH SIDE LITE TYPE

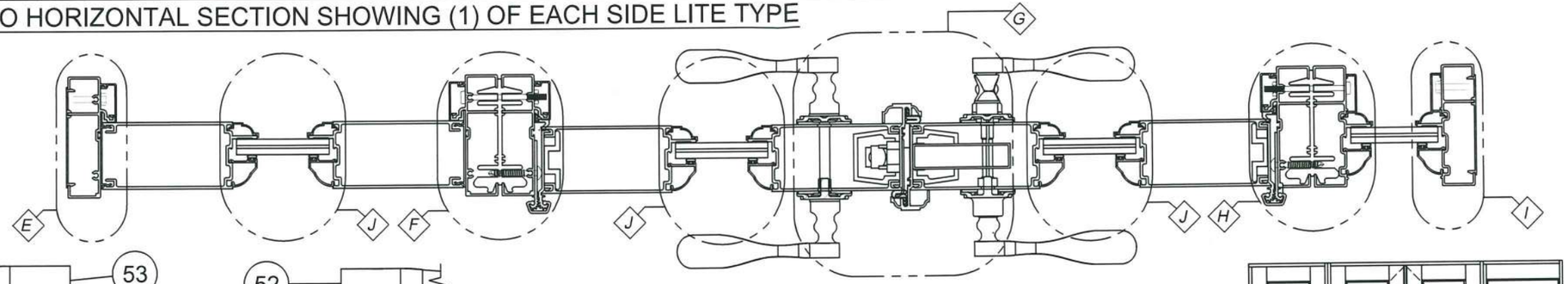

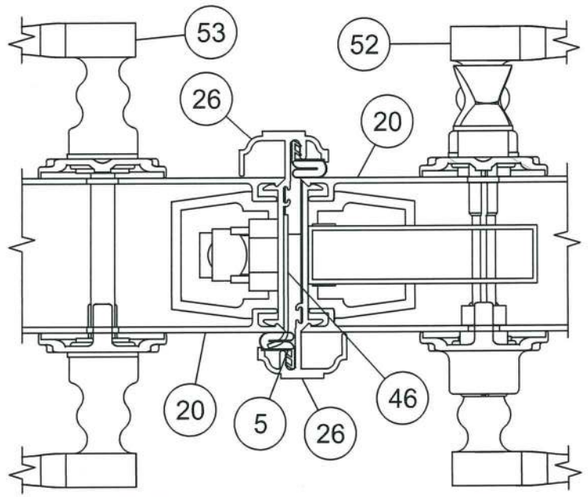

DETAIL G STILES AT ASTRAGAL

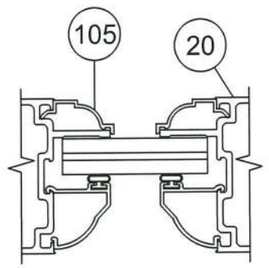

DETAIL J
SLAB AT
GLASS BED

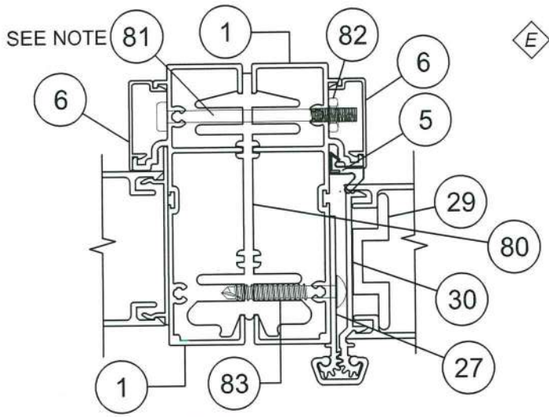

DETAIL F
FULL JAMB SIDE LITE
(AT HINGE JAMB)

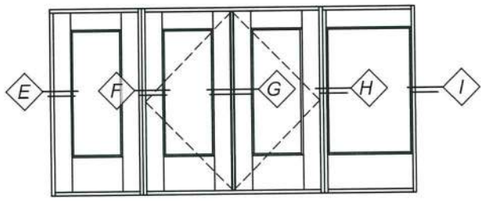

NOTE: ASSEMBLY HARDWARE QTY (3), 11" FROM TOP & BOTTOM AND ONE AT MIDSPAN

INTERIOR

EXTERIOR

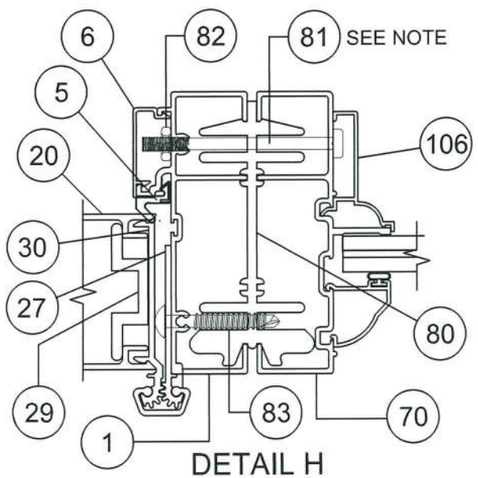

DETAIL H
NARROW JAMB SIDE LITE
(AT HINGE JAMB)

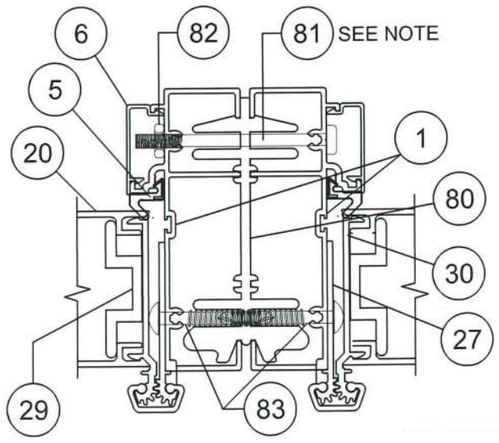

DETAIL K
HINGE JAMB TO HINGE JAMB
(NOT SHOWN ABOVE)

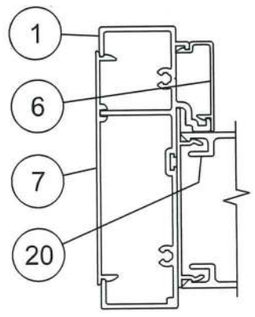

DETAIL E
JAMB, FULL JAMB
SIDE LITE

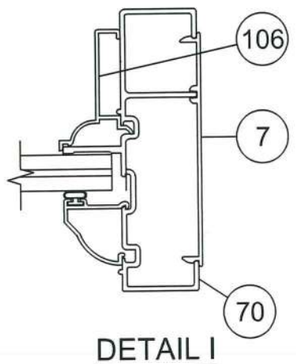

DETAIL I
JAMB, NARROW
JAMB SIDE LITE

PRODUCT RENEWED
as complying with the Florida
Buiding Code
Acceptance No 19-1126.08
Expiration Date FEB 24 2025
By Ishaq I. Chanda
Miami Dade Product Control

ANTHONY LYNN MILLER
LICENSE
No. 58705
11/22/19
STATE OF FLORIDA
PROFESSIONAL ENGINEER

A. LYNN MILLER, P.E.
FL P.E.# 58705

Revsd By:	Date:	Revisions:	
JR	04/10/17	G	REVISED # 2 AND #10.
Drawn By:	Date:	Checked By:	Date:
F.K.	12/23/04	L.T.	4/8/05

1070 TECHNOLOGY DRIVE
N. VENICE, FL 34275
(941) 480-1600

CERT. OF AUTH. #29296

PGT®

Description: HORIZONTAL SECTION DETAILS

Title: ALUM. FRENCH DOOR & SIDE LITES, IMPACT

Series/Model:	Scale:	Sheet:	Drawing No.	Rev:
FD750	1/2	6 of 12	8000-11	G

FD750 DOOR(S)

ITEM	DWG#	DESCRIPTION	PGT#
		FRAME KIT PARTS	
1	8006	FRAME - HEAD & HINGE JAMB	68006
2	8003C	OUT-SWING SILL	68003A
3	8004C	OUT-SWING SILL COVER	68004C
4	8008	DRIP CAP	68008
5	----------	HEAD, SILL & JAMB WEATHERSTRIP (SCHLEGAL)	U83337T8500
6	8007	SCREW COVER	68007
7	8009	INSTALL PLATE	68009
8	----------	FRAME ASSEMBLY SCREW #8 X 1" PH QUAD	781PQA
9	8032	ASTRAGAL END SEAL	48032
10	8058A	OUT-SWING SILL (LOW RISE)	48058
		DOOR PANEL	
5	----------	HEAD, SILL & JAMB WEATHERSTRIP (SCHLEGAL)	U83337T8500
20	8012	STILE	68012
21	8014	TOP RAIL, (THREADED ROD DESIGN)	68014
22	8013	BOTTOM RAIL, (THREADED ROD DESIGN)	68013
23	8017	TOP SWEEP	68017
24	8016	BOTTOM SWEEP	68016
25	----------	SWEEP SCREWS, #4 X 1/2" PHIL PH	
26	8015	ASTRAGAL, ACTIVE & INACTIVE	68015
27	8021B	GEAR HINGE, JAMB SIDE	68021B
28	8020A	GEAR HINGE, COVER	68020A
29	8018	GEAR HINGE, BACK-UP PLATE	68018
30	8019A	GEAR HINGE, DOOR SIDE	68019A
31	8035	GEAR HINGE, BEARING	68035
32	----------	GEAR HINGE, SET-SCREW #6-32 x 1/4"	
33	----------	GEAR HINGE, MTG. SCREW #12 x 3/4" TRUSS HD.	
34	----------	GEAR HINGE, MTG. SCREW #12 x 1 1/2" TRUSS HD.	
35	----------	THREADED ROD 5/16-18 X 36"	6TRODA
36	----------	FLANGED HEX NUT 5/16-18	7990NUTA
37	8039	TRUSS CLAMP	60378M
38	8043	S/S GEAR LATCH MECHANISM (ASHLAND)	
39	8030	LOCK BLOCK	48030
40	----------	LATCH ASS'Y SCREWS #8 X 2" SS PHILL TR HD	78X2TPAX
41	8037	S/S SHOOT BOLT ROD (SULLIVAN)	
42	8045	STANDARD FLUSH BOLTS W/ SS ROD (SULLIVAN)	
43	8031	SHOOT BOLT GUIDE	48031
44	----------	SHOOT BOLT GUIDE & STRIKE SCREW 8-32 X 3/8" SS PHILL TR HD	78X38PFTX
45	8038R	RIGHT- STRIKE PLATE AT ASTRAGAL (ACTIVE HINGED LEFT)	W5110-43S1
46	8038L	LEFT - STRIKE PLATE AT ASTRAGAL (ACTIVE HINGED RIGHT)	W5110-44S1
47	----------	STRIKE PLATE SCREWS 8-32 X 3/8" SS PHILL TR HD	78X38PFTX
48	----------	STRIKE PLATE MIDDLE SCREW 6-24 X 1/2" FH	7612FPTX
49	8036	STRIKE PLATE AT HEAD & SILL	
50	----------	HEAD STRIKE SCREWS SS 8 X 1/2 PHILL FH	7858ZAX
51	----------	STRIKE PLATE SCREWS @SILL SS 8 X 1/2 PHILL UNDERCUT FH	78X12PFHUX
52	8041	ACTIVE TRIM SET (ASHLAND)	
53	8042	PASSIVE TRIM SET (ASHLAND)	
54	8044	STAINLESS STEEL PASSIVE LOCK GEAR (ASHLAND)	
55	8014A	TOP RAIL (LAG BOLT DESIGN)	68014A
56	8013A	BOTTOM RAIL (LAG BOLT DESIGN)	68013A
57	----------	5/16" x 2 1/2" LAG BOLTS	7516LBOLTX

FD750 FULL JAMB SIDE LITE

ITEM	DWG #	DESCRIPTION	PGT#
1	8006	FRAME - HEAD, SILL & JAMB	68006
4	8008	DRIP CAP	68008
6	8007	SCREW COVER	68007
7	8009	INSTALL PLATE	68009
8	----------	FRAME ASSEMBLY SCREW #8 X 1" PH QUAD	781PQA
20	8012	STILE	68012
21	8014	TOP RAIL	68014
22	8013	BOTTOM RAIL	68013
35	----------	THREADED ROD 5/16-18 X 36"	6TRODA
36	----------	FLANGED HEX NUT 5/16-18	7990NUTA
37	8039	TRUSS CLAMP	60378M
60	----------	#8 X 3/4" PH SQ DRIVE TEK SCREW	78X34PSTW
61	8028	SIDE LITE HEAD TRIM	68028
62	8029	SIDE LITE JAMB TRIM	68029

FD750 NARROW JAMB SIDE LITE

1	8006	FRAME - HEAD & SILL	68006
4	8008	DRIP CAP	68008
6	8007	SCREW COVER	68007
7	8009	INSTALL PLATE	68009
8	----------	FRAME ASSEMBLY SCREW #8 X 1" PH QUAD	781PQA
21	8014	TOP RAIL	68014
22	8013	BOTTOM RAIL	68013
35	----------	THREADED ROD 5/16-18 X 36"	6TRODA
36	----------	FLANGED HEX NUT 5/16-18	7990NUTA
37	8039	TRUSS CLAMP	60378M
60	----------	#8 X 3/4" PH SQ DRIVE TEK SCREW	78X34PSTW
61	8028	SIDE LITE HEAD TRIM	68028
70	8010	FRAME, JAMB	68010

ASSEMBLY KIT

80	8033B	FRENCH DOOR ASSEMBLY BEAM	68033B
81	----------	#10-24 X 2 1/2" PH SCREW	
82	----------	#10-24 HEX NUT	
83	----------	#12 X 1 1/2" TR HD TEK SCREW	
84	8056	SUBSILL (OPTIONAL)	68056

GLASS, BEADS & SILICONE

90	----------	GLAZING SEALANT, DOW CORNING 899, 983 OR 995	
91	----------	7/16" LAMINATED GLASS (3/16" ANN...090 PVB, 3/16" HS)	
92	----------	7/16" LAMINATED GLASS (3/16" HS...090 PVB, 3/16" HS)	
93	----------	7/16" LAMINATED GLASS (3/16" ANN...075 VANCEVA, 3/16" HS)	
94	----------	7/16" LAMINATED GLASS (3/16" HS...075 VANCEVA, 3/16" HS)	
95	----------	7/8" LAMI I.G. (3/16" T, 1/4" SPACE, 3/16" ANN...090 PVB, 3/16" HS)	
96	----------	7/8" LAMI I.G. (3/16" T, 1/4" SPACE, 3/16" HS...090 PVB, 3/16" HS)	
97	----------	7/8" LAMI I.G. (3/16" T, 1/4" SPACE, 3/16" ANN...075 VANCEVA, 3/16" HS)	
98	----------	7/8" LAMI I.G. (3/16" T, 1/4" SPACE, 3/16" HS...075 VANCEVA, 3/16" HS)	
105	8022	BACK BEAD	68022
106	8026A	SL BACKBEAD	68026A
107	8023A	7/16" BEAD	68023A
108	8024A	7/8" IG BEAD	68024A
109	1224	VINYL BULB WSTP (THICK)	6TP247

PRODUCT RENEWED
as complying with the Florida
Building Code
Acceptance No. 19-112608
Expiration Date FEB24, 2025
By Ishwar L. Chauhan
Miami-Dade Product Control

ANTHONY LYNN MILLER
LICENSE
No. 58705
11/22/19
STATE OF FLORIDA
PROFESSIONAL ENGINEER

A. LYNN MILLER, P.E.
FL P.E.# 58705

Revsd By:	Date:	Revisions:	
JR	04/10/17	G	REVISED # 2 AND #10.
Drawn By:	Date:	Checked By:	Date:
F.K.	12/23/04	L.T.	4/8/05

1070 TECHNOLOGY DRIVE
N. VENICE, FL 34275
(941) 480-1600

CERT. OF AUTH. #29296

PGT®

Description: PARTS LIST

Title: ALUM. FRENCH DOOR & SIDE LITES, IMPACT

Series/Model:	Scale:	Sheet:	Drawing No.	Rev:
FD750	NA	7 of 12	8000-11	G

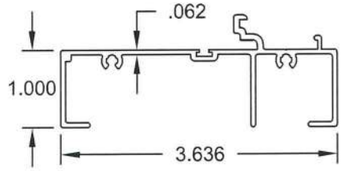

1 #8006 6063-T6
FRAME, HEAD, JAMB
AND SIDELITE SILL

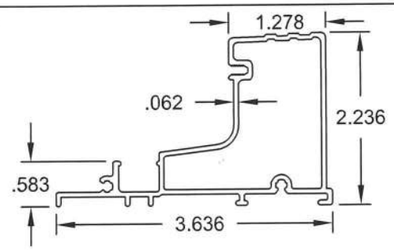

2 #8003C 6063-T6
OUT-SWING SILL

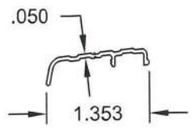

3 #8004C 6063-T5
OS SILL COVER

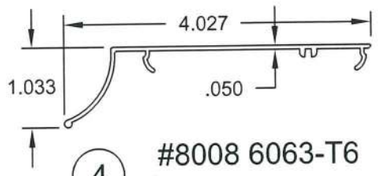

4 #8008 6063-T6
DRIP CAP

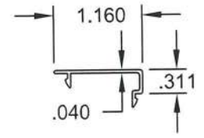

6 #8007 6063-T6
SCREW COVER

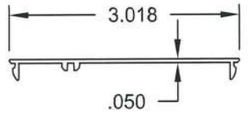

7 #8009 6063-T6
INSTALL PLATE

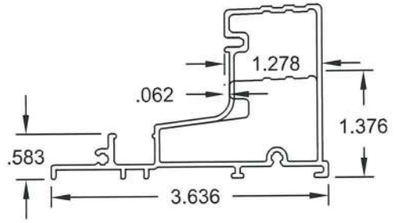

10 #8058A 6063-T6
OUT-SWING LOW SILL

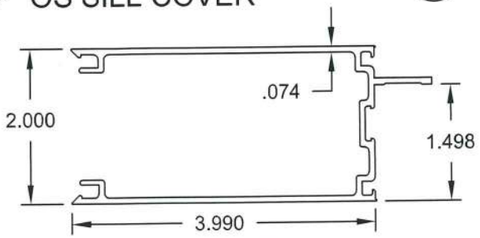

20 #8012 6063-T6
STILE

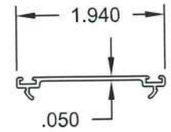

23 #8017 6063-T5
TOP SWEEP

22 #8013 6063-T6
BOTTOM RAIL

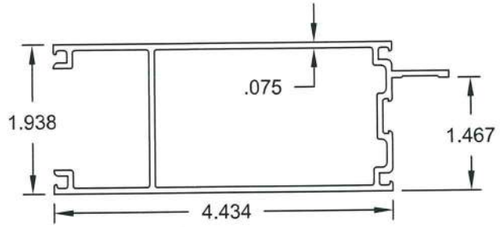

21 #8014 6063-T5
TOP RAIL

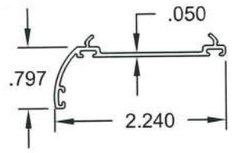

24 #8016 6063-T5
BOTTOM SWEEP

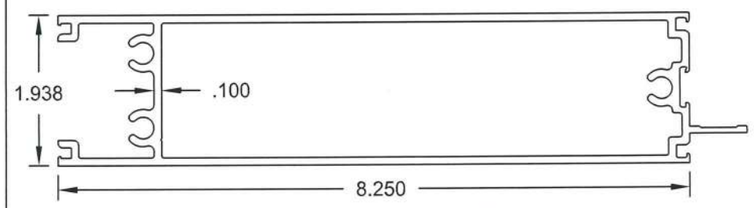

56 #8013A 6063-T6
BOTTOM RAIL, LAG BOLT DESIGN

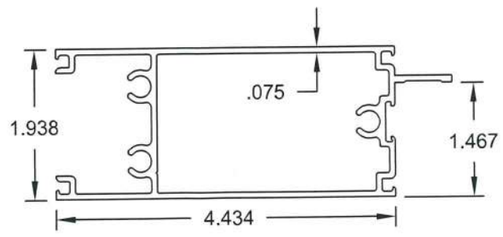

55 #8014A 6063-T5
TOP RAIL, LAG BOLT DESIGN

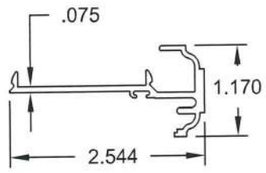

26 #8015 6063-T6
ASTRAGAL

PRODUCT RENEWED
as complying with the Florida
Building Code
Acceptance No. FY-1126.08
Expiration Date FEB 24, 2025
By Miami Dade Product Control

ANTHONY LYNN MILLER
LICENSE
No. 58705
11/22/19
STATE OF FLORIDA
PROFESSIONAL ENGINEER

A. LYNN MILLER, P.E.
FL P.E.# 58705

Revsd By:	Date:	Revisions:	
JR	04/10/17	G	REVISED # 2 AND #10.
Drawn By:	Date:	Checked By:	Date:
F.K.	12/23/04	L.T.	4/8/05

1070 TECHNOLOGY DRIVE
N. VENICE, FL 34275
(941) 480-1600

CERT. OF AUTH. #29296

PGT®

Description: EXTRUSION PROFILES

Title: ALUM. FRENCH DOOR & SIDE LITES, IMPACT

Series/Model:	Scale:	Sheet:	Drawing No.	Rev:
FD750	1/2	8 of 12	8000-11	G

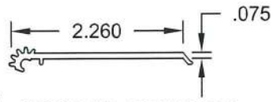

27 #8021B 6063-T6
GEAR HINGE, JAMB

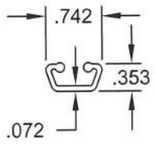

28 #8020A 6063-T6
GEAR HINGE, COVER

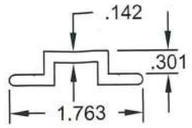

29 #8018 6063-T5
HINGE, BACK-UP

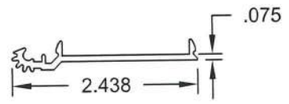

30 #8019A 6063-T6
GEAR HINGE, DOOR

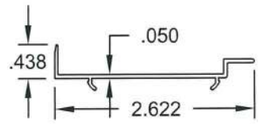

61 #8028 6063-T5
SL HEAD TRIM

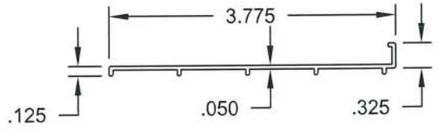

84 #8056 6063-T4
SUBSILL, OPTIONAL

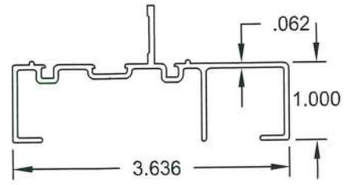

70 #8010 6063-T6
NARROW SL JAMB

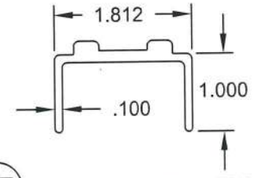

37 #8039 6063-T6
TRUSS CLAMP

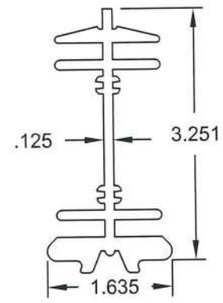

80 #8033B 6105-T5
FD ASS'Y BEAM

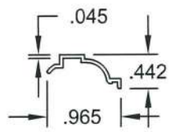

105 #8022 6063-T5
BACKBEAD

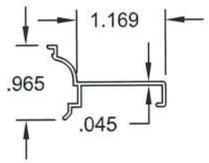

106 #8026A 6063-T5
SL BACKBEAD

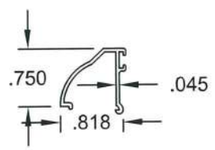

107 #8023A 6063-T5
7/16" BEAD

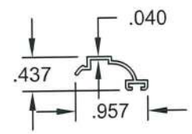

108 #8024A 6063-T5
I.G. BEAD

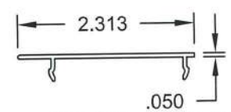

62 #8029 6063-T5
SL JAMB TRIM

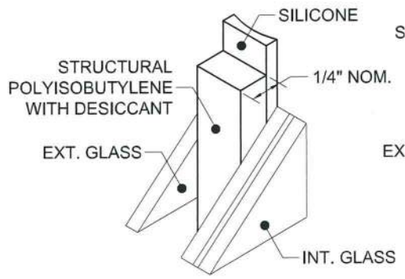

100 KODISPACE
4SG TPS

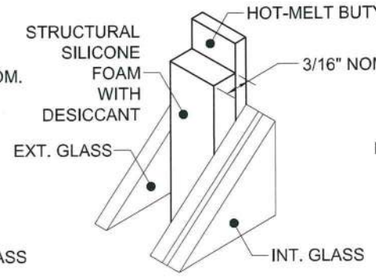

101 SUPER
SPACER® NXT™

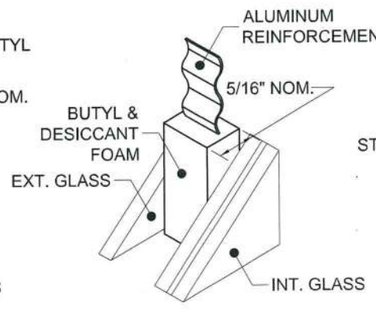

102 DURASEAL®
SPACER

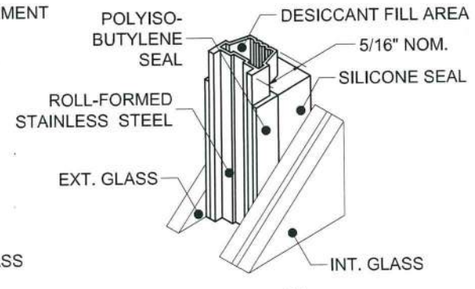

103 XL EDGE™
SPACER

Part #	Description	Material
100	Kommerling 4SG TPS Spacer System	See this Sheet for Materials
101	Quanex Super Spacer nXT with Hot Melt Butyl	
102	Quanex Duraseal Spacer	
103	Cardinal XL Edge Spacer	

REFERENCE TEST REPORTS: FTL-8717, 8968 & 8970

PRODUCT RENEWED
as complying with the Florida
Building Code
Acceptance No. 13-1126.08
Expiration Date FEB 25, 2021
By
Miami Dade Product Control

ANTHONY LYNN MILLER
LICENSE
No. 58705
STATE OF
FLORIDA
PROFESSIONAL ENGINEER
11/22/19

A. LYNN MILLER, P.E.
FL P.E.# 58705

Revsd By:	Date:	Revisions:	
JR	04/10/17	G	NO CHANGES THIS SHEET.
Drawn By:	Date:	Checked By:	Date:
F.K.	12/23/04	L.T.	4/8/05

1070 TECHNOLOGY DRIVE
N. VENICE, FL 34275
(941) 480-1600

CERT. OF AUTH. #29296

PGT®

Description: EXTRUSION PROFILES

Title: ALUM. FRENCH DOOR & SIDE LITES, IMPACT

Series/Model:	Scale:	Sheet:	Drawing No.	Rev:
FD750	1/2	9 of 12	8000-11	G

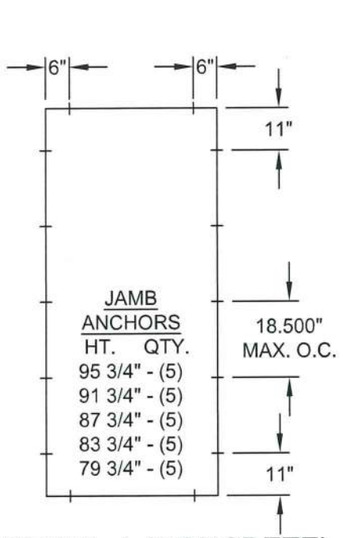

DETAIL A (CONCRETE)
(SINGLE PANEL)
ANCHOR TYPES:
B OR C

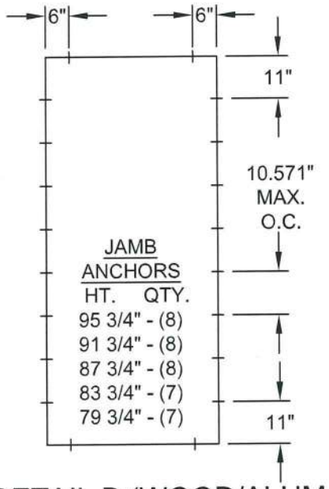

DETAIL B (WOOD/ALUM.)
(SINGLE PANEL)
ANCHOR TYPES:
C OR A

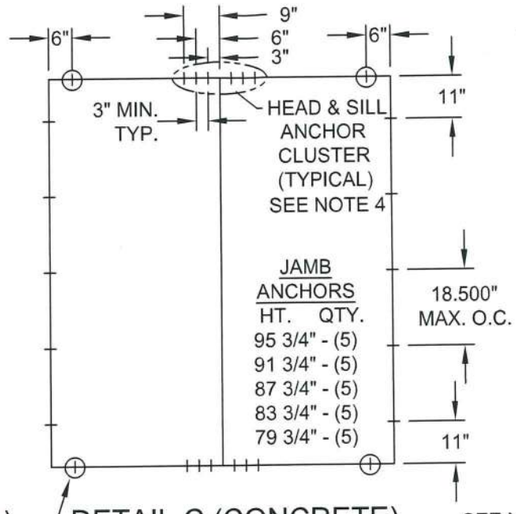

DETAIL C (CONCRETE)
(2 OR MORE PANELS)
ANCHOR TYPES:
B OR C

SEE NOTE 4 REGARDING APPLICABLITY OF CIRCLED ANCHOR LOCATIONS

SEE NOTE 5 REGARDING APPLICABLITY OF CIRCLED ANCHOR LOCATIONS

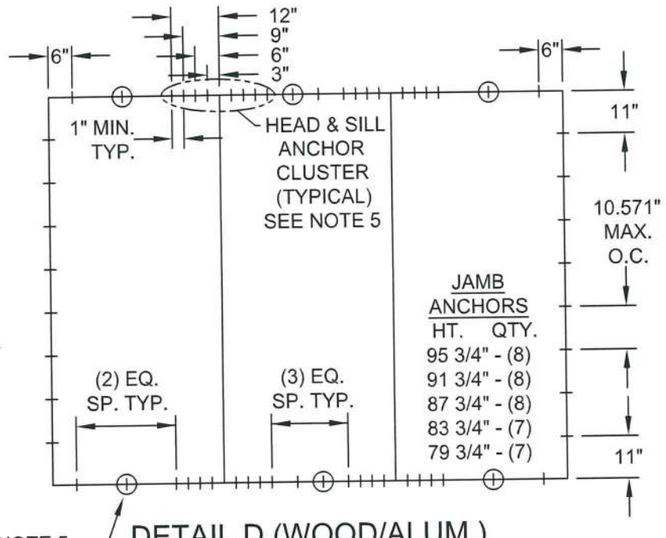

DETAIL D (WOOD/ALUM.)
(2 OR MORE PANELS)
ANCHOR TYPES:
C OR A

ANCHORAGE SPACING REQUIREMENTS:

1. DETAILS A AND B ABOVE REPRESENT ANCHORING OF SINGLE X DOORS, OR INDIVIDUAL SIDE LITE O PANELS WITH FULL OR NARROW WIDTH JAMBS. DETAILS C AND D ABOVE REPRESENT ANCHORING OF ANY MIXTURE OF DOUBLE XX DOORS, SINGLE X DOORS, NARROW JAMB OR FULL JAMB SIDE LITE PANELS, FOR MULTIPLE-PANEL INSTALLATIONS OF TWO OR MORE PANELS. UNLESS OTHERWISE STATED, DIMENSIONS OF DETAILS A THROUGH D ARE MAXIMUMS.

2. ANCHOR TYPES: ANCHOR TYPES: SEE TABLE A, SHEET 1 FOR ANCHOR TYPES, SUBSTRATES AND LIMITATIONS.

3. SINGLE PANEL CONFIGURATIONS: (DETAIL A, CONCRETE SUBSTRATE. DETAIL B, WOOD/ALUM. SUBSTRATE)

   HEAD AND SILL.....6" MAX. FROM FRAME CORNERS.
   JAMBS.....11" MAX. FROM FRAME CORNERS, 18.500" MAX. O.C. CONCRETE SUBSTRATE (DETAIL A) AND 10.571" MAX. O.C. WOOD SUBSTRATE (DETAIL B).

4. TWO OR MORE PANEL CONFIGURATIONS: (DETAIL C, CONCRETE SUBSTRATE)

   HEAD AND SILL: 6" MAX. FROM FRAME CORNERS IF PANEL WIDTH IS 15" OR GREATER AND AT 3", 6" AND 9" MAX. ON EACH SIDE OF ASSEMBLY BEAM AND/OR ASTRAGAL LOCATIONS (CLUSTER OF 6).

   JAMBS: 11" MAX. FROM FRAME CORNERS AND 18.500" MAX. O.C

5. TWO OR MORE PANEL CONFIGURATIONS: (DETAIL D, WOOD/ALUM. SUBSTRATE)

   HEAD AND SILL: 6" MAX. FROM FRAME CORNERS AND AT 3", 6", 9" AND 12" MAX. ON EACH SIDE OF ASSEMBLY BEAM AND/OR ASTRAGAL LOCATIONS (CLUSTER OF 8). CIRCLED ANCHOR OUTSIDE CLUSTER REQUIRED IF PANEL WIDTH IS OVER 27-3/4".

   JAMBS: 11" MAX. FROM FRAME CORNERS AND 10.571" MAX. O.C

PRODUCT RENEWED
as complying with the Florida
Buiding Code
Acceptance No 15-1126.08
Expiration Date FEB24,2025
By Lchang L. Lhamdo
Miami Dade Product Control

ANTHONY LYNN MILLER
LICENSE
No. 58705
STATE OF
FLORIDA
PROFESSIONAL ENGINEER
11/22/19

A. LYNN MILLER, P.E.
FL P.E.# 58705

Revsd By:	Date:	Revisions:	
JR	04/10/17	G	REVISED NOTES, CLUSTER QUANTITY.
Drawn By:	Date:	Checked By:	Date:
F.K.	12/23/04	L.T.	4/8/05

1070 TECHNOLOGY DRIVE
N. VENICE, FL 34275
(941) 480-1600

CERT. OF AUTH. #29296

PGT®

Description: ANCHORAGE SPACING
Title: ALUM. FRENCH DOOR & SIDE LITES, IMPACT

Series/Model:	Scale:	Sheet:	Drawing No.	Rev:
FD750	1/4	10 of 12	8000-11	G

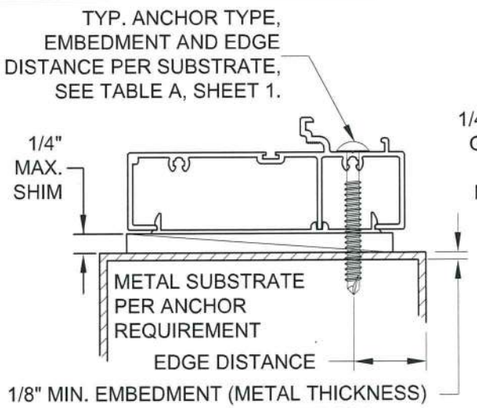

TYPICAL SIDE LITE SILL
(DIRECT TO METAL)

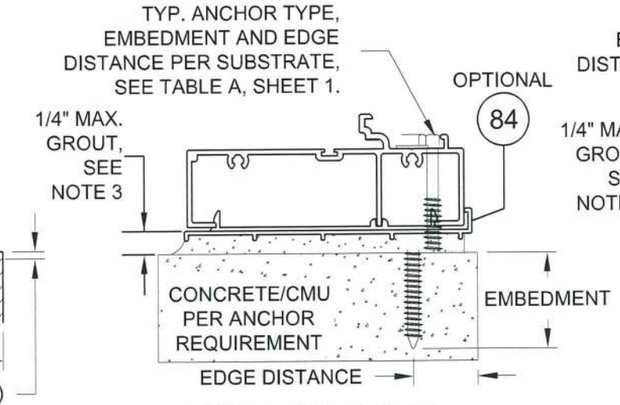

TYPICAL SIDE LITE SILL
(DIRECT TO CONCRETE)

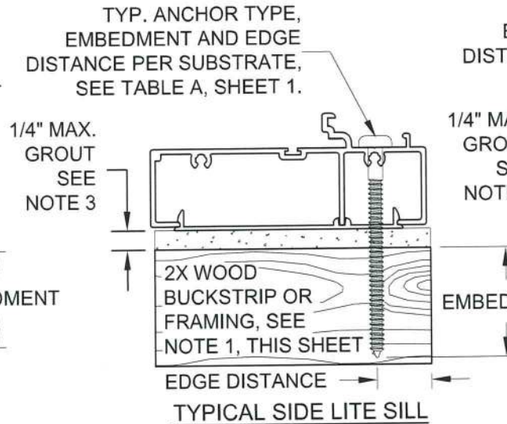

TYPICAL SIDE LITE SILL
(DIRECT TO WOOD)

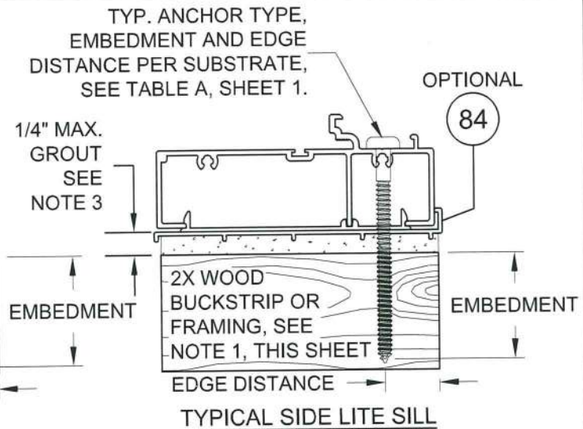

TYPICAL SIDE LITE SILL
(DIRECT TO WOOD)

EXTERIOR INTERIOR
(ALL HEAD & SILL SECTIONS)

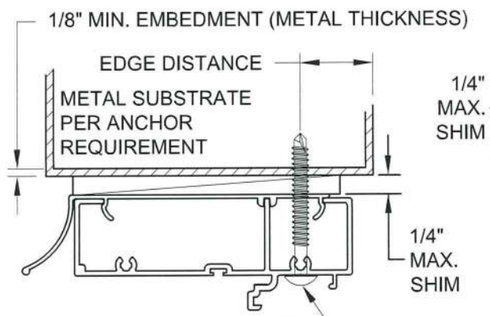

TYPICAL DOOR & SIDE LITE HEAD
(DIRECT TO METAL)

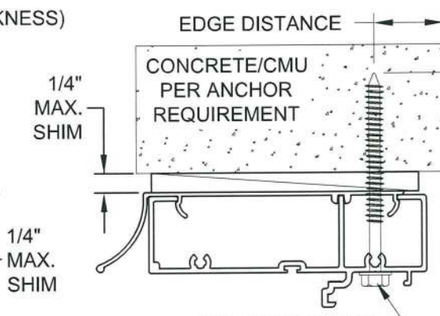

TYPICAL DOOR & SIDE LITE HEAD
(DIRECT TO CONCRETE)

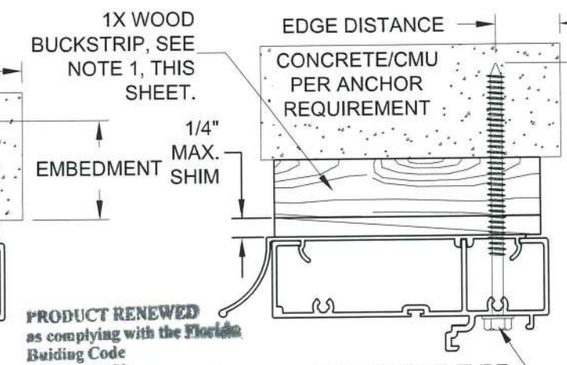

PRODUCT RENEWED
as complying with the Florida Building Code
Acceptance No_____
Expiration Date_____
By_____
Miami Dade Product Control

TYPICAL DOOR & SIDE LITE HEAD
(THRU 1X INTO CONCRETE)

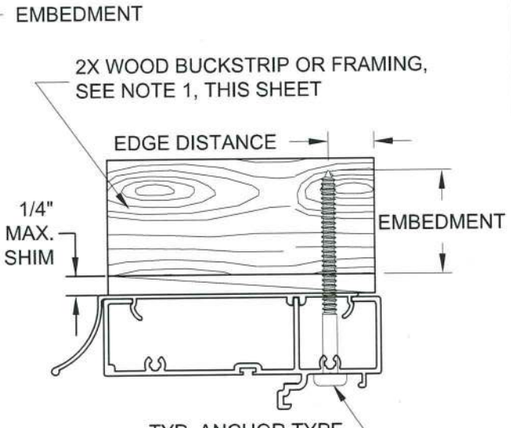

TYPICAL DOOR & SIDE LITE HEAD
(DIRECT TO WOOD)

NOTES:

1. WOOD BUCKS DEPICTED AS 1x ARE LESS THAN 1-1/2" THICK. 1x WOOD BUCKS ARE OPTIONAL IF UNIT IS INSTALLED DIRECTLY TO SOLID CONCRETE. WOOD BUCKS DEPICTED AS 2x ARE 1-1/2" THICK OR GREATER. INSTALLATION TO THE SUBSTRATE OF WOOD BUCKS TO BE ENGINEERED BY OTHERS OR AS APPROVED BY THE AUTHORITY HAVING JURISDICTION (AHJ).
2. FOR ATTACHMENT TO ALUM: THE MAT'L SHALL BE A MIN. STRENGTH OF 6063-T5 AND A MIN. OF 1/8" THICK. THE ALUM. STRUCTURAL MEMBER SHALL BE OF A SIZE TO PROVIDE FULL SUPPORT TO THE DOOR FRAME SIMILAR TO THAT SHOWN IN THE DETAILS ON THIS SHEET FOR 2x WOOD BUCKS. THE ANCHOR SHALL BE A #12 SMS WITH FULL ENGAGEMENT INTO THE ALUM. IF THESE CRITERIA ARE MET, THE PRESSURES SHOWN ON SHEET 2 AND ANCHORAGE SPACING FOR WOOD SHOWN ON SHEET 10 MAY BE USED.
3. IF SILL IS TIGHT TO SUBSTRATE, GROUT OR OTHER MATERIAL IS NOT REQUIRED. IF USED, NON-SHRINK, NON-METALLIC GROUT, 3400 PSI MIN., (DONE BY OTHERS) MUST FULLY SUPPORT THE ENTIRE LENGTH OF THE SILL THAT IS NOT TIGHT TO THE SUBSTRATE, AND TRANSFER SHEAR LOAD TO SUBSTRATE.

PRODUCT RENEWED
as complying with the Florida Building Code
Acceptance No 19-1126.08
Expiration Date FEB 24, 2025
By
Miami Dade Product Control

1070 TECHNOLOGY DRIVE
N. VENICE, FL 34275
(941) 480-1600
CERT. OF AUTH. #29296

PGT®

Description: ANCHORAGE DETAILS
Title: ALUM. FRENCH DOOR & SIDE LITES, IMPACT
Series/Model: FD-750 | Scale: 1/4 | Sheet: 11 of 12 | Drawing No.: 8000-11

Revsd By:	Date:	Revisions:		Drawn By:	Date:	Checked By:	Date:
JR	04/10/17	G	CLARIFIED DETAILS, ADDED METAL SUBSTRATE	F.K.	12/23/04	L.T.	4/8/05

ANTHONY LYNN MILLER
LICENSE
No. 58705
11/22/19
STATE OF FLORIDA
PROFESSIONAL ENGINEER

A. LYNN MILLER, P.E.
FL P.E.# 58705

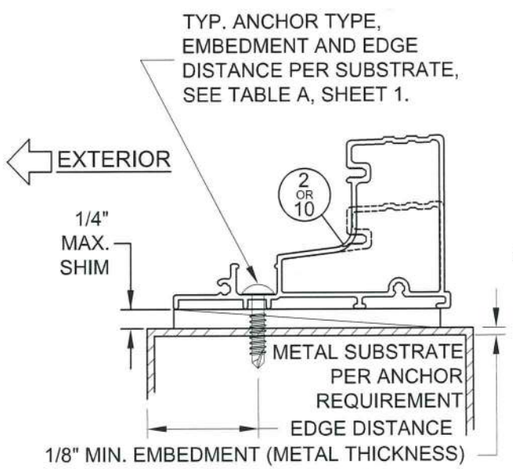

TYPICAL DOOR SILL
(DIRECT TO METAL)

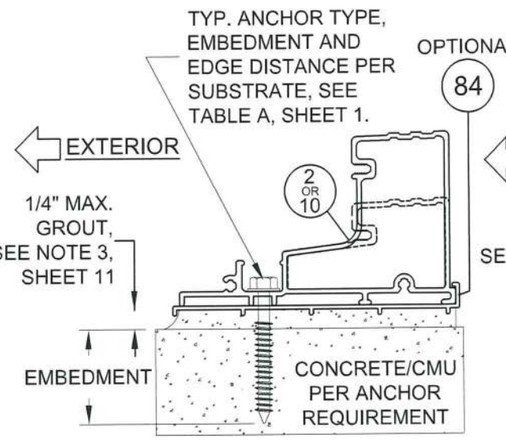

TYPICAL DOOR SILL
(DIRECT TO CONCRETE)

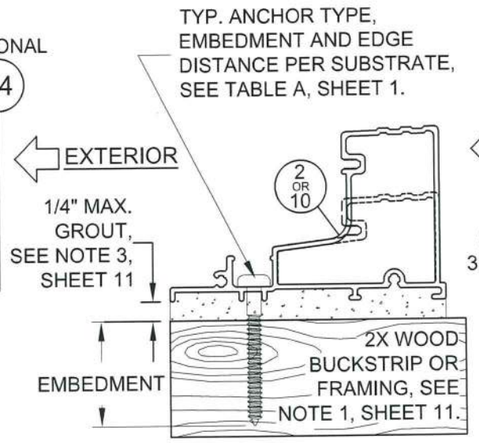

TYPICAL DOOR SILL
(DIRECT TO WOOD)

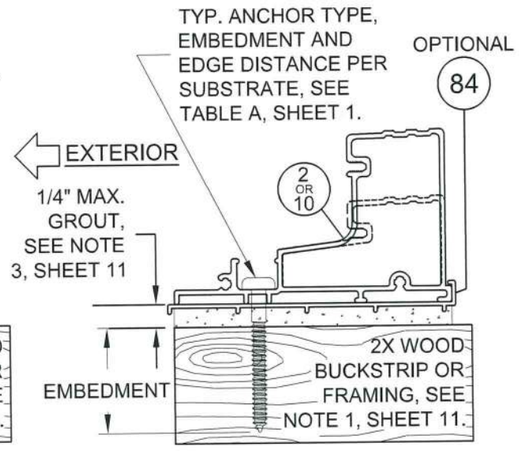

OPTIONAL DOOR SILL
(DIRECT TO WOOD)

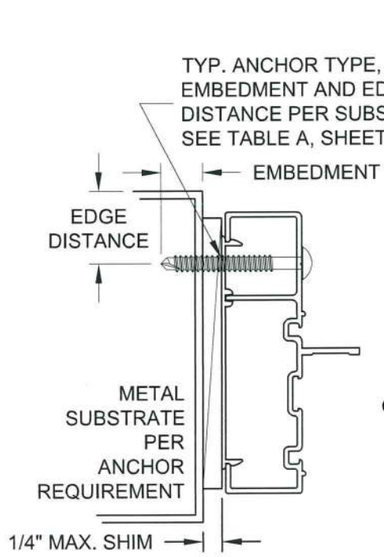

TYPICAL DOOR & SIDE LITE JAMB
(DIRECT TO METAL)

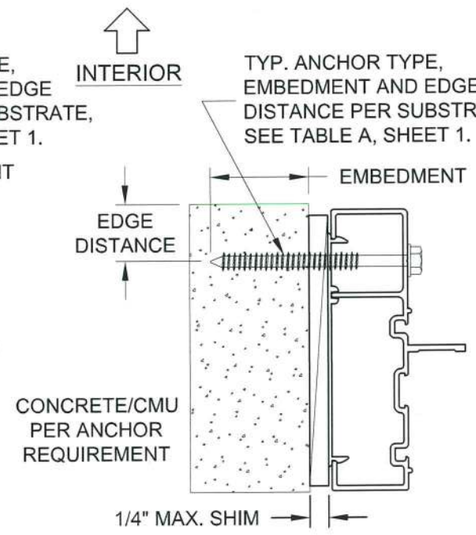

TYPICAL DOOR & SIDE LITE JAMB
(DIRECT TO CONCRETE)

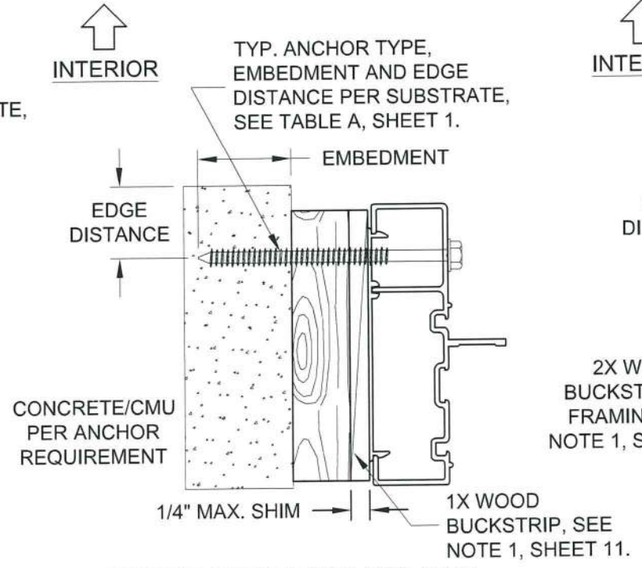

TYPICAL DOOR & SIDE LITE JAMB
(THRU 1X INTO CONCRETE)

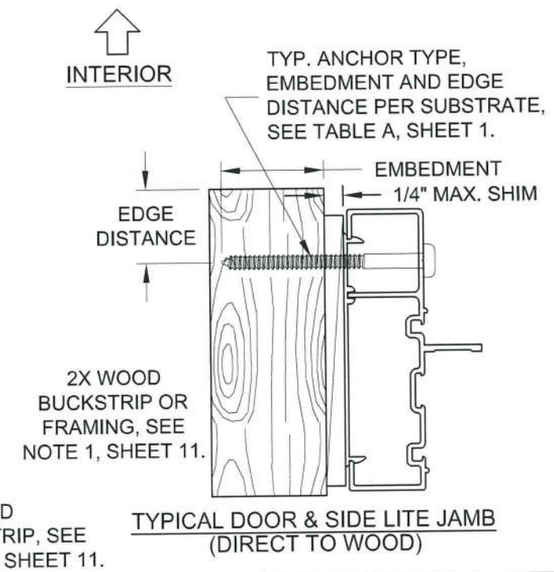

TYPICAL DOOR & SIDE LITE JAMB
(DIRECT TO WOOD)

PRODUCT RENEWED
as complying with the Florida
Building Code
Acceptance No 19-1126.08
Expiration Date FEB 24 2025
By
Miami Dade Product Control

ANTHONY LYNN MILLER
LICENSE
No. 58705
STATE OF FLORIDA
PROFESSIONAL ENGINEER
11/22/19

A. LYNN MILLER, P.E.
FL P.E.# 58705

1070 TECHNOLOGY DRIVE
N. VENICE, FL 34275
(941) 480-1600
CERT. OF AUTH. #29296

PGT®

Description: ANCHORAGE DETAILS

Title: ALUM. FRENCH DOOR & SIDE LITES, IMPACT

Series/Model:	Scale:	Sheet:	Drawing No.
FD-750	1/4	12 of 12	8000-11

Revsd By:	Date:	Revisions:		Drawn By:	Date:	Checked By:	Date:
JR	04/10/17	G	CLARIFIED DETAILS, ADDED METAL SUBSTRATE	F.K.	12/23/04	L.T.	4/8/05